ParagonLED®

Product Catalog



TTL-XT (Extreme Temperatures Lighting)

MIL-STD-810G (–80 °C) + MIL-STD-810H (+115 °C)

www.thermal-tech-lighting.com

c UL us LISTED

IP66

TAA COMPLIANT



V17

ParagonLED®



Company Profile

- 2008 – Company founded, establishing its focus on advanced AC COB LED technology
- 2010 – Achieved the world's first CE certification for AC COB LED technology, setting a global benchmark.
- 2011 – Recognized as the first to gain both FCC and ErP certifications for AC COB LEDs.
- 2012 – Introduced the world's first AC COB LED explosion-proof lighting and obtained UL certification.
- 2013 – Attained ISO9001:2008 certification and established the world's first 3V–300V AC LM80 laboratory, certified by DOE and Energy Star.
- 2016 – Expanded to an annual production capacity of 6 million units, reinforcing large- scale manufacturing capability.
- 2017 – Set up the world's first 600V AC LM80-certified laboratory, further strengthening reliability testing infrastructure.
- 2019 – Developed the world's first ACCOB light engine with Tc = 145°C, marking a breakthrough in high-temperature LED technology.
- 2020 – Deployed the extreme-environment ACCOB light engine (–80°C to +115°C) into commercial operation at U.S. paper mills and steel mills. By 2025, more than 60,000 light engines have been successfully installed in these facilities.
- 2023 – Became a subsidiary of the AVC Group, enhancing global resources and thermal management expertise.
- 2025 – Completed the world's first flip-chip ACCOB light engine designed for extreme temperatures.
- 2025 -Achieved a breakthrough in Nuclear Lighting: Successfully passed 1,000 kGy Gamma radiation and 4.46×10^{14} n/cm^2 Fast-neutron fluence testing at the National Atomic Energy Research Institute (NARI).
- Targeting PSE certification (100V/200V) for the Japanese market and UL certification (120V–600V) for linear models, paving the way for global expansion.



High Temperature Environment

ParagonLED is a pioneer in industrial lighting, pushing the boundaries of LED technology by extending operational temperature ranges from the conventional -25°C to 50°C to an impressive -80°C to +115°C. This innovation is critical in industrial settings where extreme heat and challenging conditions demand reliable, high-performance lighting solutions. High-temperature resistant lighting is essential in industries such as:

1. Steel Production and Forging: Ensures safety and efficiency during processes like melting, forging, and rolling.
2. Foundry Operations: Withstands the intense heat of molten metal pouring and casting.
3. Glass Manufacturing: Functions reliably in extreme heat during the melting of raw materials.
4. Ceramic Production: Endures prolonged high-temperature firing in kilns.
5. Coking Plants: Handles the extreme temperatures of coal processing into coke.
6. Heat Treatment Facilities: Resists heat generated during the phase transitions of metals.

Specialized lighting design incorporates high-temperature resistant materials, cooling systems, and high IP ratings (IP66 or above) to protect against dust, heat, and corrosion.
Waste incineration plants also rely on high-temperature lighting to operate safely and efficiently. These systems must endure high heat, resist corrosive chemicals, and offer robust dust and moisture protection. Properly selected lighting ensures operational safety and reliability in these environments.

ParagonLED's expert assembly and testing teams provide unmatched technical support, guaranteeing the durability and performance of your lighting systems in even the most demanding conditions.

ParagonLED®

HOT SALE

TTL-XT — Extreme Temperatures Lighting





225W/350W

28,000~44,000 LUMENS

- Beam Angle 110°/70°
- 120VAC/277VAC/347VAC/480V AC/600VAC/250VDC
- 5000K color temperature
- -80°C (-112°F) to 115°C (239°F)
- MIL-STD-810G (–80 °C) + MIL-STD-810H (+115 °C)

500W

63,000 LUMENS

- Beam Angle 70°
- 120VAC/277VAC/347VAC/480V AC/600VAC/250VDC
- 5000K color temperature
- -80°C (-112°F) to 115°C (239°F)
- MIL-STD-810G (–80 °C) + MIL-STD-810H (+115 °C)





45W

5,625 LUMENS

- Beam Angle 70°
- 120VAC/277VAC/347VAC/480V AC/600VAC/ 250VDC
- 5000K color temperature
- -80°C (-112°F) to 115°C (239°F)
- MIL-STD-810G (–80 °C) + MIL-STD-810H (+115 °C)

10W~140W

1,250~18,000 LUMENS

- Beam Angle 110°
- 120VAC/277VAC/347VAC/480V AC/600VAC/250VDC
- 5000K color temperature
- -80°C (-112°F) to 125°C (257°F)
- MIL-STD-810G (–80 °C) + MIL-STD-810H (+115 °C)

c UL us LISTED IP66 TAA COMPLIANT FC

TTL-XT Series
Extreme Temperatures Lighting

We use Nord-Lock washers for optimized safety performance.
NORD-LOCK

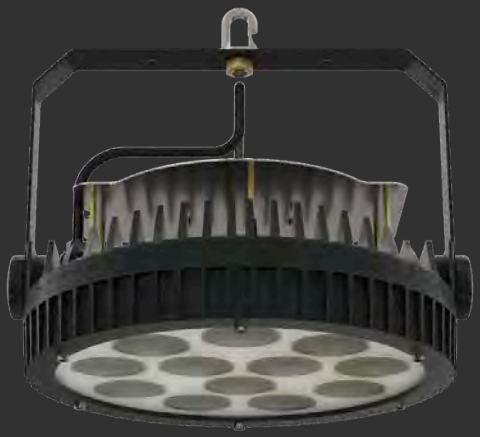





When you absolutely must have the

Toughest Industrial LED High Bay

MIL-STD-810G (–80 °C) + MIL-STD-810H (+115 °C)

- **High Ambient Temp. -112°F(-80°C) to 239°F (115°C)**
- **Field Replaceable LEDs**
- C5M/PVDF **coating optional**
- **Chemical Repellent**
- **Instantaneous activation of lighting function, without the need for standby time.**
- **Anti-Glare**

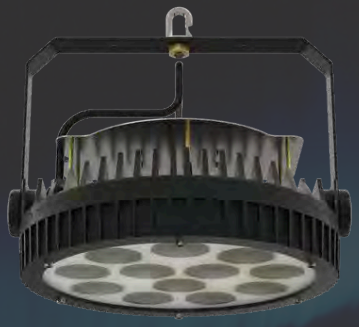

TTL-XT Series
Extreme Temperatures Lighting

"A real innovation in extreme environment LED lighting. "



Engineered and tested for reliable operation you can count on in temperatures ranging from
-112°F(-80°C) to 239°F(115°C)



Game changing LEDmodule design (see details below). Replaceable to reduce the cost of long term ownership.



PVDF corrosion resistant coating over a die-cast aluminum housing + stainless steel hardware for incredible durability. 1,000 hour salt-fog test yielded no corrosion. [ASTM B117-19/ASTM D610-08(2019)]



Chemical repellent housing to stand up in areas where industrial chemicals are used or produced.



Instantaneous activation of lighting function, without the need for standby time.



Provide better eye protection and workplace safety.



Nord-Lock wedge-locking washers consistently outperform alternative locking methods when it comes to securing bolted joints. This is proven by the results of thousands of Junker tests carried out for customers all over the world by Nord-Lock engineers.
When exposed to transverse vibrations underneath the bolt head, alternative locking methods such as plain washers, helical spring washers, check lock nuts, nylon inserted nuts and double nuts all show a loss of clamp load – loosening the bolt and exposing the joint to failure unless frequently retightened.
So, Nord-Lock engineers would usually recommend wedge-locking washers to achieve the most secure bolted joint.

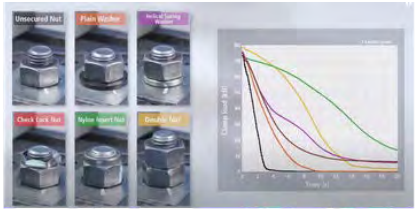





The heart of the TTL series is its revolutionary
DRIVER-ON-BOARD LED MODULE.

MIL-STD-810G (–80 °C) + MIL-STD-810H (+115 °C)

A marvel of engineering and innovative manufacturing processes, this proprietary module gives the TTL series outstanding light performance even in extreme hot and cold temperatures and requires no separate driver.

Over-Engineered
We use 12 IC current control chips when 4 would be enough for extra durability. Tested to 200° C without failure.

No Load Shedding
As modules approach their max. rated temperature, lumen output will not decrease. Reducing output at high temp. is a common occurrence with other high temp. lights.

1.2 mil Gold Wire
TTL series LEDs are connected with gold wire for enhanced durability under heavy thermal cycle stress.



No Harmonic Distortion
Quality components and advanced circuit design results in longer fixture life and no line noise generated by the TTL series.

No Inrush Current
Inrush current has been engineered out of the module preventing large line voltage drops at start-up protecting the fixture and other equipment.

Waterproof/Thermal Coating
Special siliconebasedcoatingcreates a waterproof seal around the module and dissipates heat for increased durability.



“Every component

of the *TTL Series* was selected/designed wit

high ambient temperature

applicationsin mind. “



PVDF / C5M coating repels chemicals and prevents corrosion

Rugged die-cast aluminum housing

Metal reflector **70°**beam pattern ensures efficient light distribution.

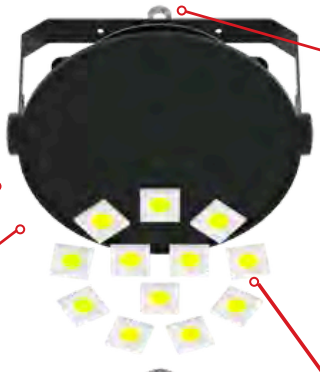

304 Stainless Steel hook. Yield strength 600MPa

Heavy-duty #2 gauge mounting bracket 180° angle adjustment



Game changing proprietary driver-on-board LED modules are replaceable for extended fixture life and lower cost of ownership

Flat tempered glass lens provides impact protection, heat resistance and excellent optical clarity

Specialized ribbed silicone rubber gasket provides the perfect lens seal

10’ AWM style 4476 power cord is rated for 600V and 200°C

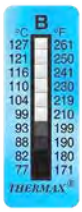

High temp thermostat label verifies highest temperature reached

304 Stainless Steel Dust Cover

Factory torqued and sealed stainless steel cable gland

Stainless steel nameplate with registration QR code and fixture specifications

Oversized cooling fins maximize thermal efficiency

c UL us LISTED

IP66

TAA COMPLIANT

FC

Technical Info

SPECIFICATIONS

Voltage	120VAC/277VAC/347VAC/480VAC/ 600VAC/250VDC
Wattage	500W (+/- 10%)
Color Temp	5000 Kelvin
Housing	C5M(standard) / PVDF optional
Color	Black(standard) / White optional
Lens	Flat tempered glass lens
CRI	>70
Efficacy	125 lm/W (500W)
Beam Angle	70°
Cable Gland	Stainless steel
Power Cord	600V / 200°C rated
Surge Protection	> 20KV
Ambient Temp.	-80°C (-112°F) to 115°C (239°F)

LUMENS

500W
62,500 lm

WARRANTY

Ambient Temperature	Warranty
65°C (149°F) Max Ambient Temp.	7 Year Limited Warranty
85°C (185°F) Max Ambient Temp.	3 Year Limited Warranty
105°C (221°F) Max Ambient Temp.	1 Year Limited Warranty
105°C (221°F) Max Ambient Temp.	3 Year Limited Warranty (optional)

TTL Getter System (optional) — extends lifetime to 3 years @105 °C. It continuously absorbs residual oxygen, moisture, and gases released from internal materials under high temperature, preventing oxidation and degradation.

PART NUMBERS

Part Number	Watt	Voltage
TTL-500-50-120V-1yz	500W	120VAC
TTL-500-50-277V-1yz		277VAC
TTL-500-50-347V-1yz		347VAC
TTL-500-50-480V-1yz		480VAC
TTL-500-50-600V-1yz		600VAC
TTL-500-50-250V-1yz		250VDC

x(Beam Angle) 0=110° 1=70°
y(Coating) : 0=PVDF 1=C5M
z(Fixture color) 0=white 1=black

MIL-STD-810G (–80 °C) + MIL-STD-810H (+115 °C)

c UL us LISTED IP66 TAA COMPLIANT FC

DIMENSIONS :

Diameter : 562mm(22.1inch)
Height : 441mm(17.4inch)
Weight : 24.2Kg(53.4lb)

INDUSTRIAL APPLICATIONS

- Primary Metal Fabrication
- Steel Mills
- Smelting Operations
- Casting Foundries
- Metal Polishing
- Boiler Rooms
- Blast Furnaces
- Paint Curing
- Ovens/Kilns
- Pulp/Paper Production
- Glass Manufacturing
- Power Generation
- Power Plants
- Chemical Plants
- Refineries
- Aircraft Hangars
- Ship Yards
- Rail Yards
- Aerospace Facilities
- Industrial Freezers
- Ice Manufacturing
- Cryogenic Industries
- cold-chain storage
- overhead crane

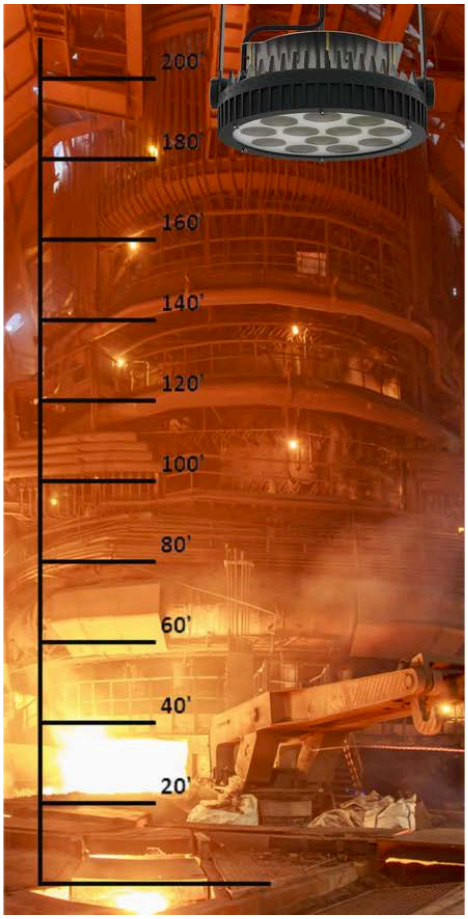

ACCESSORIES

Wire Guard



Visor



TTL-XT Series
Extreme Temperatures Lighting

We use Nord-Lock washers for optimized safety performance.
NORD-LOCK

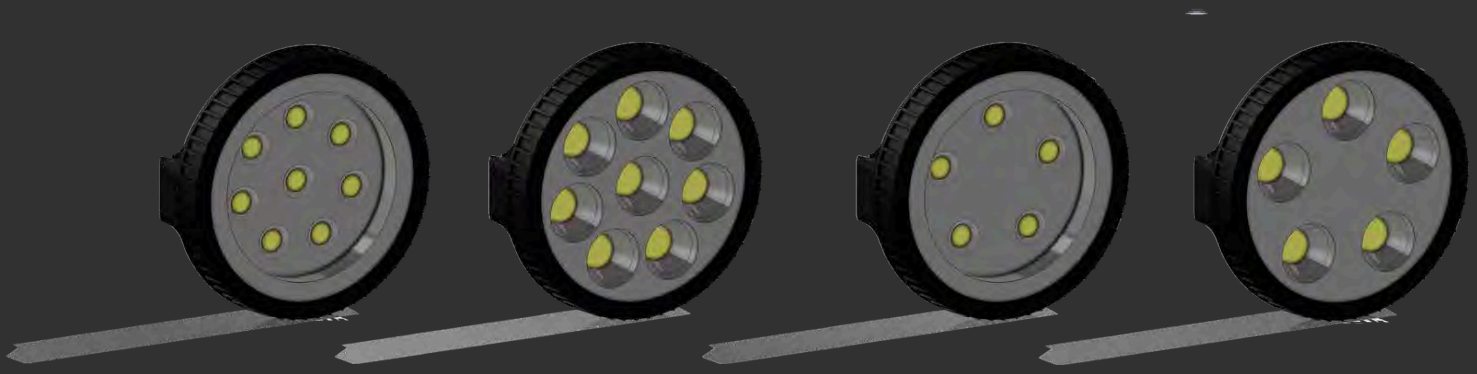





When you absolutely must have the

Toughest Industrial LED High Bay

MIL-STD-810G (–80 °C) + MIL-STD-810H (+115 °C)

- **High Ambient Temp. -112°F(-80°C) to 239°F (115°C)**
- **PVDF/C5M coating optional**
- **Instantaneous activation of lighting function, without the need for standby time.**
- **Field Replaceable LEDs**
- **Chemical Repellent**
- **Anti-Glare**

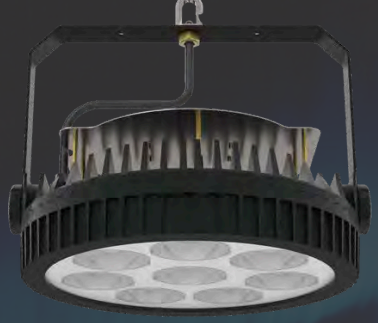

TTL-XT Series
Extreme Temperatures Lighting

"A real innovation in extreme environment LED lighting. "

Engineered and tested for reliable operation you can count on in temperatures ranging from
-112°F(-80°C) to 239°F(115°C)

PVDF corrosion resistant coating over a die-cast aluminum housing + stainless steel hardware for incredible durability. 1,000 hour salt-fog test yielded no corrosion. [ASTM B117-19/ASTM D610-08(2019)]

Instantaneous activation of lighting function, without the need for standby time.

DOB Driver On Board Technology

Game changing LEDmodule design (see details below). Replaceable to reduce the cost of long term ownership.

Chemical repellent housing to stand up in areas where industrial chemicals are used or produced.



Provide better eye protection and workplace safety.

We use Nord-Lock washers for optimized safety performance.
NORD-LOCK

Nord-Lock wedge-locking washers consistently outperform alternative locking methods when it comes to securing bolted joints. This is proven by the results of thousands of Junker tests carried out for customers all over the world by Nord-Lock engineers.
When exposed to transverse vibrations underneath the bolt head, alternative locking methods such as plain washers, helical spring washers, check lock nuts, nylon inserted nuts and double nuts all show a loss of clamp load – loosening the bolt and exposing the joint to failure unless frequently retightened.
So, Nord-Lock engineers would usually recommend wedge-locking washers to achieve the most secure bolted joint.

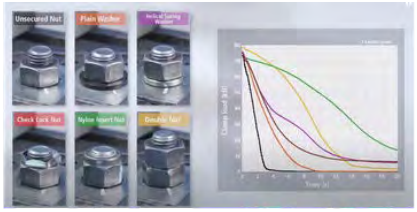





The heart of the TTL series is its revolutionary
DRIVER-ON-BOARD LED MODULE.

MIL-STD-810G (–80 °C) + MIL-STD-810H (+115 °C)

A marvel of engineering and innovative manufacturing processes, this proprietary module gives the TTL series outstanding light performance even in extreme hot and cold temperatures and requires no separate driver.

Over-Engineered
We use 12 IC current control chips when 4 would be enough for extra durability. Tested to 200° C without failure.

No Load Shedding
As modules approach their max. rated temperature, lumen output will not decrease. Reducing output at high temp. is a common occurrence with other high temp. lights.

1.2 mil Gold Wire
TTLseriesLEDs are connected with gold wire for enhanced durability under heavy thermal cycle stress.



No Harmonic Distortion
Quality components and advanced circuit design results in longer fixture life and no line noise generated by the TTL series.

No Inrush Current
Inrush current has been engineered out of the module preventing large line voltage drops at start-up protecting the fixture and other equipment.

Waterproof/Thermal Coating
Special siliconebasedcoatingcreates a waterproof seal around the module and dissipates heat for increased durability.

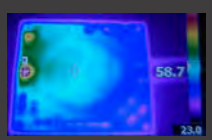

“Every component

of the *TTL Series* was selected/designed wit

high ambient temperature

applicationsin mind. “



PVDF / C5M coating repels chemicals and prevents corrosion

Rugged die-cast aluminum housing

Metal reflector **70°**beam pattern ensures efficient light distribution.

110° beam pattern reflector optional

304 Stainless Steel hook. Yield strength 600MPa

Heavy-duty #2 gauge mounting bracket

180° angle adjustment



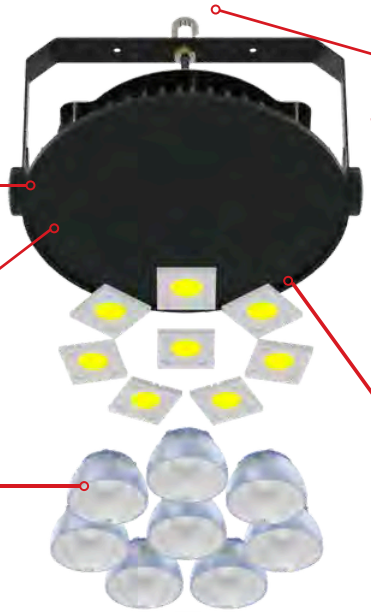

Game changing proprietary driver-on-board LED modules are replaceable for extended fixture life and lower cost of ownership

Flat tempered glass lens provides impact protection, heat resistance and excellent optical clarity

Specialized ribbed silicone rubber gasket provides the perfect lens seal

10’ AWM style 4476 power cord is rated for 600V and 200°C

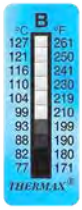

High temp thermostat label verifies highest temperature reached

304 Stainless Steel Dust Cover

Factory torqued and sealed stainless steel cable gland

Stainless steel nameplate with registration QR code and fixture specifications

Oversized cooling fins maximize thermal efficiency

c UL us LISTED

IP66

TAA COMPLIANT

FC

Technical Info

SPECIFICATIONS

Voltage	120VAC/277VAC/347VAC/480VAC/ 600VAC/250VDC
Wattage	225W/350W (+/- 10%)
Color Temp	5000 Kelvin
Housing	C5M(standard) / PVDF optional
Color	Black(standard) / White optional
Lens	Flat tempered glass lens
CRI	>70
Efficacy	125 lm/W
Beam Angle	70°/110°
Cable Gland	Stainless steel
Power Cord	600V / 200°C rated
Surge Protection	> 20KV
Ambient Temp.	-80°C (-112°F) to 115°C (239°F)

MIL-STD-810G (–80 °C) + MIL-STD-810H (+115 °C)

c UL us LISTED

IP66

TAA COMPLIANT

FC

LUMENS

225W	350W
28,125 lm	43,750 lm

WARRANTY

Ambient Temperature	Warranty
65°C (149°F) Max Ambient Temp.	7 Year Limited Warranty
85°C (185°F) Max Ambient Temp.	3 Year Limited Warranty
105°C (221°F) Max Ambient Temp.	1 Year Limited Warranty
105°C (221°F) Max Ambient Temp.	3 Year Limited Warranty (optional)

TTL Getter System (optional) — extends lifetime to 3 years @105 °C. It continuously absorbs residual oxygen, moisture, and gases released from internal materials under high temperature, preventing oxidation and degradation.

PART NUMBERS

Part Number	Watt	Voltage
TTL-225-50-120V-1yz	225W	120VAC
TTL-225-50-277V-1yz		277VAC
TTL-225-50-347V-1yz		347VAC
TTL-225-50-480V-1yz		480VAC
TTL-225-50-600V-1yz		600VAC
TTL-225-50-250V-1yz		250VDC

Part Number	Watt	Voltage
TTL-350-50-120V-1yz	350W	120VAC
TTL-350-50-277V-1yz		277VAC
TTL-350-50-347V-1yz		347VAC
TTL-350-50-480V-1yz		480VAC
TTL-350-50-600V-1yz		600VAC
TTL-350-50-250V-1yz		250VDC

x(Beam Angle) 0=110° 1=70°
y(Coating) : 0=PVDF 1=C5M
z(Fixture color) 0=white 1=black

DIMENSIONS :

Diameter : 450mm(17.7inch)
Height : 373mm(14.7inch)
Weight : 15.3Kg(33.7lb)

INDUSTRIAL APPLICATIONS

- Primary Metal Fabrication
- Steel Mills
- Smelting Operations
- Casting Foundries
- Metal Polishing
- Boiler Rooms
- Blast Furnaces
- Paint Curing
- Ovens/Kilns
- Pulp/Paper Production
- Glass Manufacturing
- Power Generation
- Power Plants
- Chemical Plants
- Refineries
- Aircraft Hangars
- Ship Yards
- Rail Yards
- Aerospace Facilities
- Industrial Freezers
- Ice Manufacturing
- Cryogenic Industries
- cold-chain storage
- overhead crane

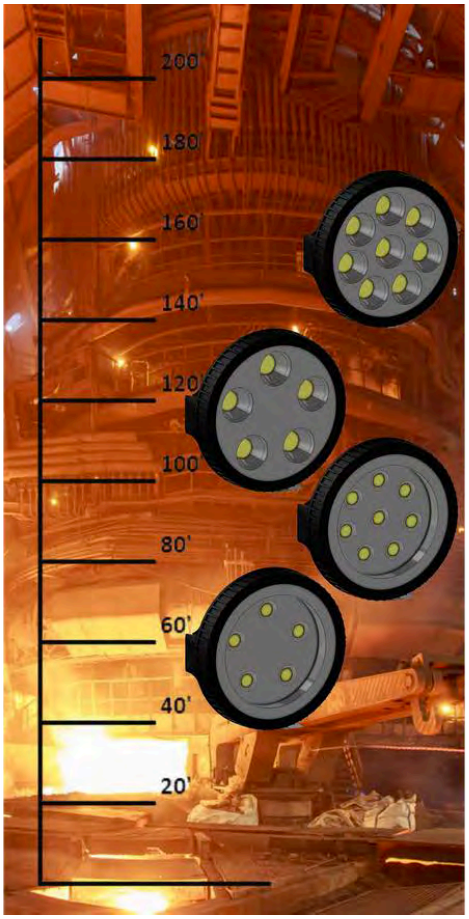

ACCESSORIES

welded wire mesh light guards





Specifications and data are subject to change without notic



TTL-XT Series
Extreme Temperatures Lighting

"A real innovation in extreme environment LED lighting. "

Engineered and tested for reliable operation you can count on in temperatures ranging from
-112°F(-80°C) to 239°F(115°C)

Game changing LEDmodule design (see details below). Replaceable to reduce the cost of long term ownership.

PVDF corrosion resistant coating over a die-cast aluminum housing + stainless steel hardware for incredible durability. 1,000 hour salt-fog test yielded no corrosion. [ASTM B117-19/ASTM D610-08(2019)]

Chemical repellent housing to stand up in areas where industrial chemicals are used or produced.

Instantaneous activation of lighting function, without the need for standby time.

Provide better eye protection and workplace safety.

We use Nord-Lock washers for optimized safety performance.
NORD-LOCK

Nord-Lock wedge-locking washers consistently outperform alternative locking methods when it comes to securing bolted joints. This is proven by the results of thousands of Junker tests carried out for customers all over the world by Nord-Lock engineers.
When exposed to transverse vibrations underneath the bolt head, alternative locking methods such as plain washers, helical spring washers, check lock nuts, nylon inserted nuts and double nuts all show a loss of clamp load – loosening the bolt and exposing the joint to failure unless frequently retightened.
So, Nord-Lock engineers would usually recommend wedge-locking washers to achieve the most secure bolted joint.

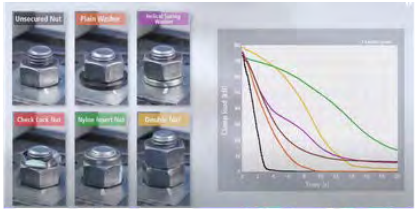





The heart of the TTL series is its revolutionary
DRIVER-ON-BOARD LED MODULE.

MIL-STD-810G (–80 °C) + MIL-STD-810H (+115 °C)

A marvel of engineering and innovative manufacturing processes, this proprietary module gives the TTL series outstanding light performance even in extreme hot and cold temperatures and requires no separate driver.

Over-Engineered
We use 12 IC current control chips when 4 would be enough for extra durability. Tested to 200° C without failure.

No Load Shedding
As modules approach their max. rated temperature, lumen output will not decrease. Reducing output at high temp. is a common occurrence with other high temp. lights.

1.2 mil Gold Wire
TTLseriesLEDs are connected with gold wire for enhanced durability under heavy thermal cycle stress.



No Harmonic Distortion
Quality components and advanced circuit design results in longer fixture life and no line noise generated by the TTL series.

No Inrush Current
Inrush current has been engineered out of the module preventing large line voltage drops at start-up protecting the fixture and other equipment.

Waterproof/Thermal Coating
Special siliconebasedcoatingcreates a waterproof seal around the module and dissipates heat for increased durability.

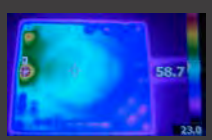

Technical Info

SPECIFICATIONS

Voltage 120VAC / 277VAC / 347VAC / 480VAC/ 600VAC/ 250VDC
Wattage 45W
Color Temp 4000K /5000 K
Housing C5M coating
Color Black(standard)
Lens Flat tempered glass lens
Efficacy 125 lm/W
CRI >70
Beam Angle 70°
Cable Gland Stainless steel
Power Cord 600V / 200°C rated
Surge Protection > 15KV
Ambient Temp. -80°C (-112°F) to 115°C (239°F)
MIL-STD-810G (–80 °C) + MIL-STD-810H (+115 °C)

LUMENS

70°
5,625 lm

(5000K)

WARRANTY

Ambient Temperature	Warranty Length
65°C (149°F) Max Ambient Temp.	7 Year Limited Warranty
85°C (185°F) Max Ambient Temp.	5 Year Limited Warranty
105°C (221°F) Max Ambient Temp.	3 Year Limited Warranty

Ordering Information

TTL	4 5 W	40 4000K 50 5000K	120V 277V 347V 480V 600V 250V	1 70°	1 C5M	1 black

Example:TTL-45-50-120V-111

Dimensions

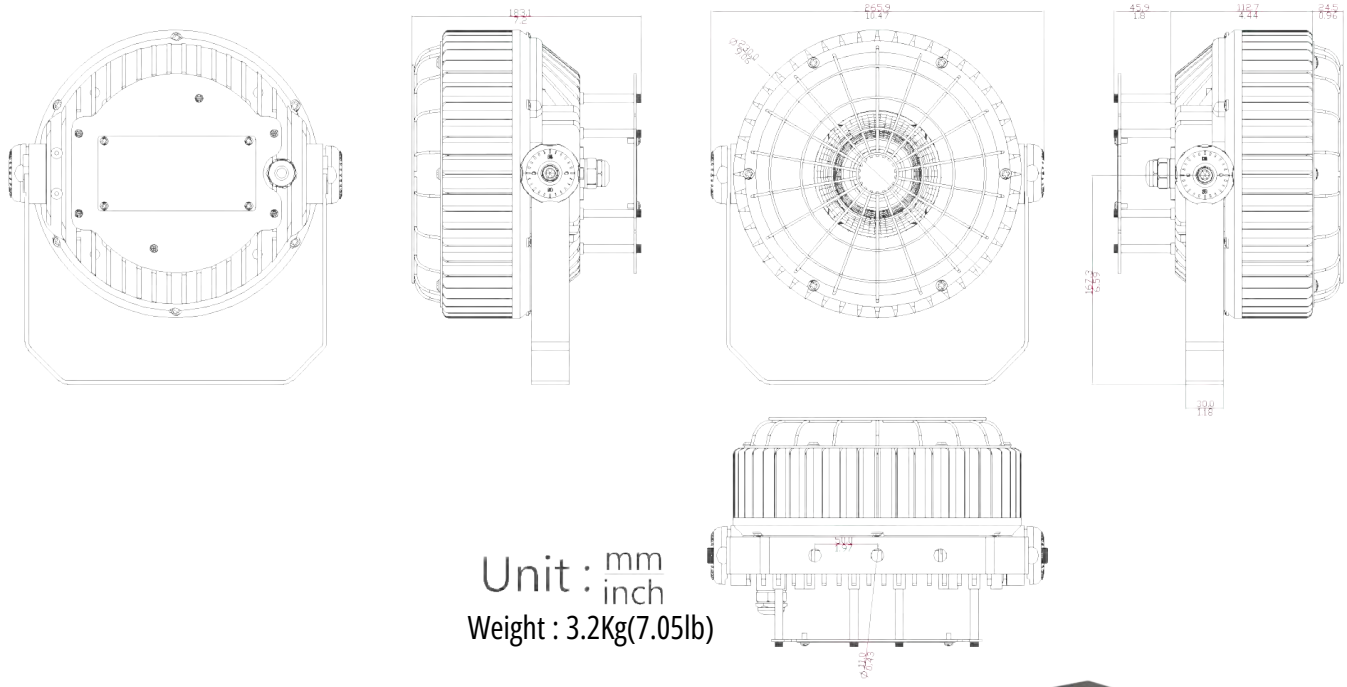

Unit : mm / inch
Weight : 3.2Kg(7.05lb)



Specifications and data are subject to change without notice.

TTL-XT Series
Extreme Temperatures Lighting

We use Nord-Lock washers for optimized safety performance.
NORD-LOCK

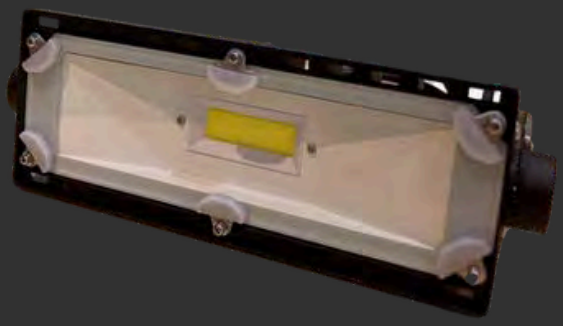



When you absolutely must have the

Toughest Industrial LED Task Light

MIL-STD-810G (–80 °C) + MIL-STD-810H (+115 °C)

- **High Ambient Temp. -112°F(-80°C) to 257°F (125°C)**
- **Field Replaceable LEDs**
- **Spraying Plastics/PVDF coating optional**
- **Chemical Repellent**
- **Instantaneous activation of lighting function, without the need for standby time.**
- **Anti-Glare**

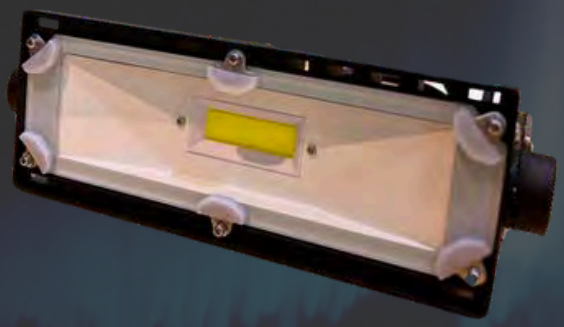

TTL-XT Series

Extreme Temperatures Lighting

"A real innovation in extreme environment LED lighting. "

Engineered and tested for reliable operation you can count on in temperatures ranging from
-112°F(-80°C) to 257°F(125°C)

PVDF corrosion resistant coating over a die-cast aluminum housing + stainless steel hardware for incredible durability. 1,000 hour salt-fog test yielded no corrosion. [ASTM B117-19/ASTM D610-08(2019)]

Instantaneous activation of lighting function, without the need for standby time.

DOB Driver On Board Technology

Game changing LED module design (see details below). Replaceable to reduce the cost of long term ownership.

Chemical repellent housing to stand up in areas w industrial chemicals are used or produced.

Provide better eye protection and workplace safety.

We use Nord-Lock washers for optimized safety performance.
NORD-LOCK

Nord-Lock wedge-locking washers consistently outperform alternative locking methods when it comes to securing bolted joints. This is proven by the results of thousands of Junker tests carried out for customers all over the world by Nord- Lock engineers. When exposed to transverse vibrations underneath the bolt head, alternative locking methods such as plain washers, helical spring washers, check lock nuts, nylon inserted nuts and double nuts all show a loss of clamp load – loosening the bolt and exposing the joint to failure unless frequently retightened. So, Nord-Lock engineers would usually recommend wedge-locking washers to achieve the most secure bolted joint.

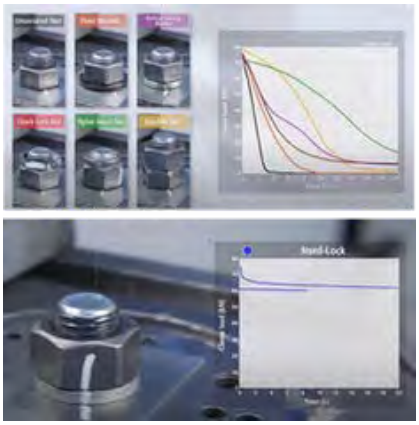



The heart of the TTL series is its revolutionary

DRIVER-ON-BOARD LED MODULE.

MIL-STD-810G (–80 °C) + MIL-STD-810H (+115 °C)

A marvel of engineering and innovative manufacturing processes, this proprietary module gives the TTL series outstanding light performance even in extreme hot and cold temperatures and requires no separate driver.

Over-Engineered

We use 12 IC current control chips when 4 would be enough for extra durability. Tested to 200° C without failure.

No Load Shedding

As modules approach their max. rated temperature, lumen output will not decrease. Reducing output at high temp. is a common occurrence with other high temp. lights.

1.2 mil Gold Wire

TTL series LEDs are connected with gold wire for enhanced durability under heavy thermal cycle stress.



Low Harmonic Distortion

Quality components and advanced circuit design results in longer fixture life and no line noise generated by the TTL series.

Zero Inrush Current

Inrush currenthas been engineered out of the module preventing large line voltage drops at start-up protecting the fixture and other equipment.

Waterproof/Thermal Coating

Special silicone based coating creates a waterproof seal around the module and dissipates heat for increased durability.

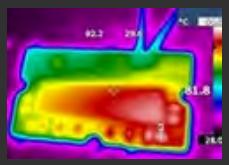

“Every component of the *TTL Series* was selected/designed with high ambient temperature applications in mind. “

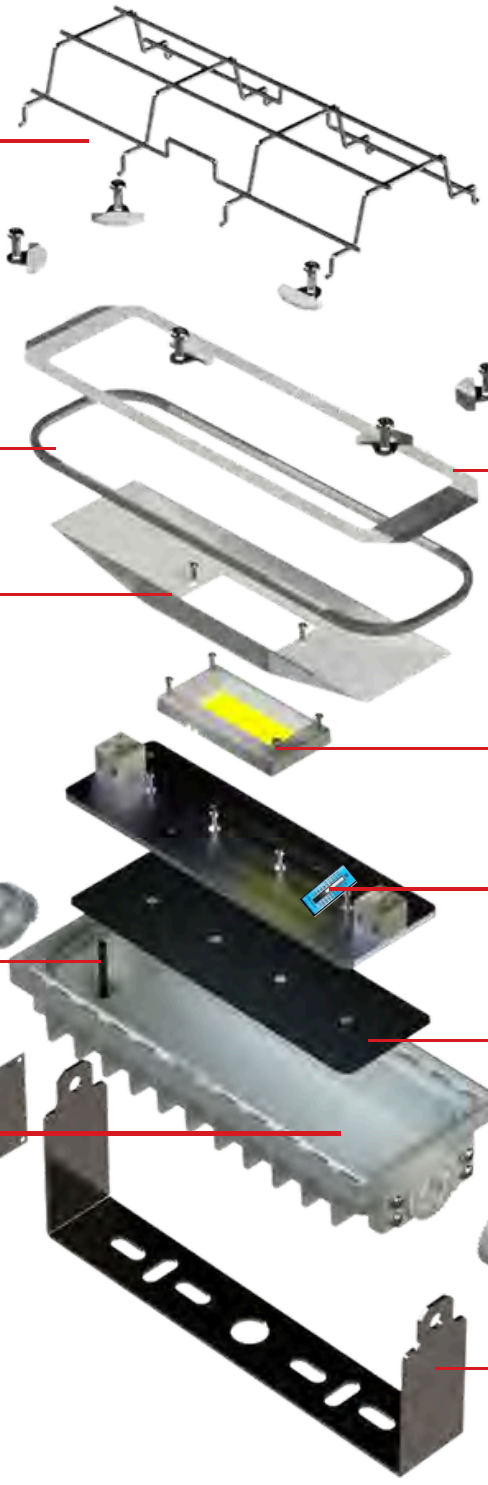

visor protect fixture from outer force or impact

Specialized ribbed silicone rubber gasket provides the perfect lens seal

110° Beam pattern reflector

600V / 200°C rated cable

Rugged die-cast aluminum housing

Flat tempered glass lens provides impact protection, heat resistance and excellent optical clarity

Game changing proprietary driver-on-board LED modules are replaceable for extended fixture life and lower cost of ownership

Thermal Label



Graphite sheet enhances thermal release and avoid VOCs (Volatile organic compounds).

mounting bracket
180° angle adjustment
304 stainless steel

UL CERTIFIED IP66 IP68 TAA COMPLIANT FC

Technical Info

SPECIFICATIONS

Voltage 120VAC / 277VAC / 347VAC / 480VAC/ 600VAC/ 250VDC
Wattage 10W~140W
Color Temp 4000K /5000 K
Housing Spraying Painting(standard) / PVDF optional
Color Black
Lens Flat tempered glass lens
Efficacy 125 lm/W (10W / 20W / 35W)
CRI >70
Beam Angle 110°
Cable Gland Stainless steel
Power Cord 600V /200°C rated
Surge Protection >15KV
Ambient Temp. -80°C (-112°F) to 125°C (257°F)
MIL-STD-810G (–80 °C) + MIL-STD-810H (+115 °C)

LUMENS

10W	20W	35W
1,250 lm	2,500 lm	4,375lm

(one unit, 5000K)

WARRANTY

Ambient Temperature	Warranty Length
65°C (149°F) Max Ambient Temp.	7 Year Limited Warranty
85°C (185°F) Max Ambient Temp.	3 Year Limited Warranty
105°C (221°F) Max Ambient Temp.	1 Year Limited Warranty
105°C (221°F) Max Ambient Temp.	3 Year Limited Warranty (optional)

TTL Getter System (optional) — extends lifetime to 3 years @105 °C. It continuously absorbs residual oxygen, moisture, and gases released from internal materials under high temperature, preventing oxidation and degradation.

Ordering Information

Example:TTL-040-50-120V-2

Series	Wattage		Color Temperature	Voltage		Unit	
TTL	010	10W	40 4000K	120V	120VAC	1	one unit
	020	20W	50 5000K	277V	277VAC	2	two units
	030	30W		347V	347VAC	3	three units
	035	35W		480V	480VAC	4	four units
	040	40W		600V	600VAC		
	060	60W		250V	250VDC		
	070	70W					
	080	80W					
	105	105W					
	140	140W					

IP66
IP68

DIMENSIONS :

One Unit
Width: 110mm(4.33inch)
Length: 1ft
Height:138.88mm(5.47inch)
Weight : 1.95Kg(4.30lbs)

Two Unit
Width: 110mm(4.33inch)
Length :2ft
Height :138.88mm(5.47inch)
Weight : 3.79Kg(8.36lbs)

Three Unit
Width: 110mm(4.33inch)
Length : 3ft
Height :138.88mm(5.47inch)
Weight :5.37Kg(11.84lbs)

Four Unit
Width: 110mm(4.33inch)
Length : 4ft
Height :138.88mm(5.47inch)
Weight :7.5Kg(16.5lbs)

INDUSTRIAL APPLICATIONS

Primary Metal Fabrication
Steel Mills
Smelting Operations
Casting Foundries
Metal Polishing
Boiler Rooms

Blast Furnaces Paint
Curing Ovens/Kilns
Pulp/Paper Production
Glass Manufacturing
Power Generation

Power Plants
Chemical Plants
Refineries
Aircraft Hangars
Ship Yards
RailYards

Aerospace Facilities
Industrial Freezers
Ice Manufacturing
Cryogenic Industries
cold-chain storage
overhead crane

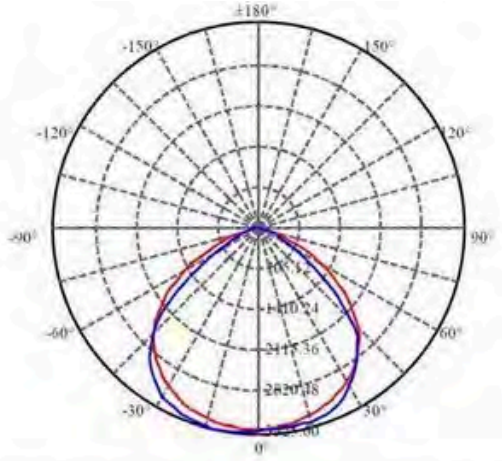

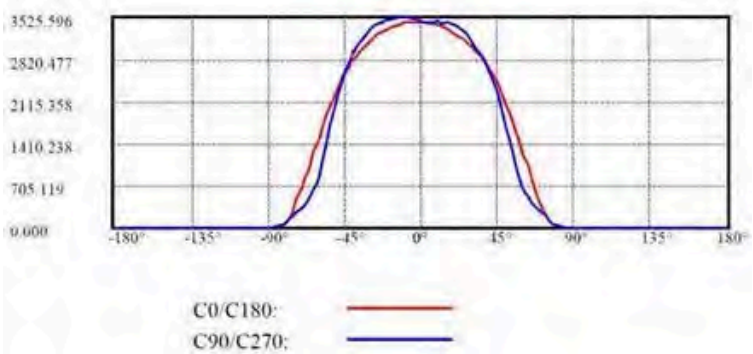

ACCESSORIES

welded wire mesh light guards



IP66



IP68

Technical Info

DIMENSION

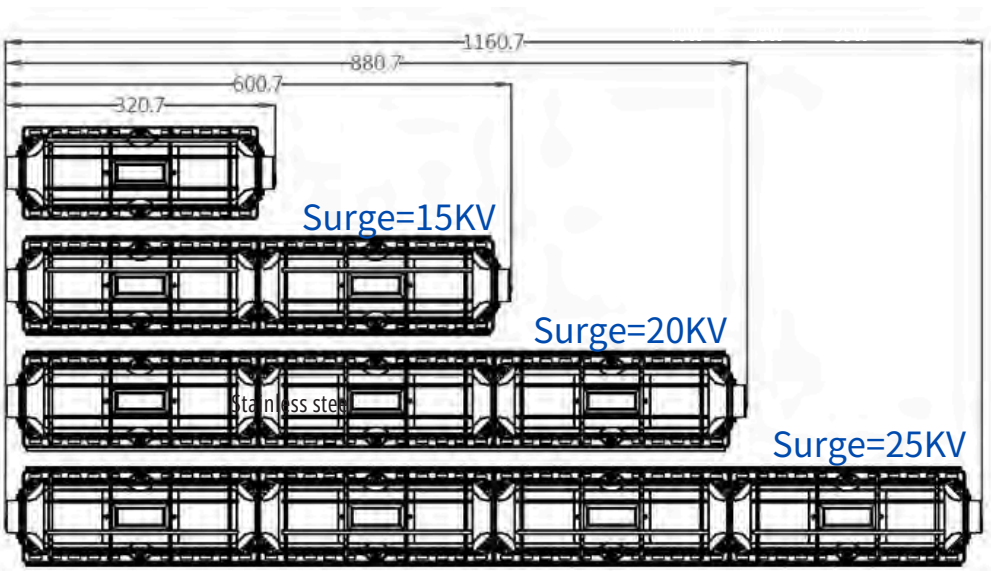

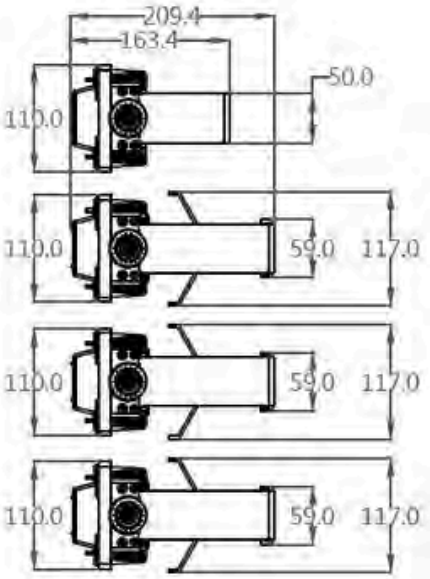

IP66

with wire guards, Unit: mm

CONFIGURATION

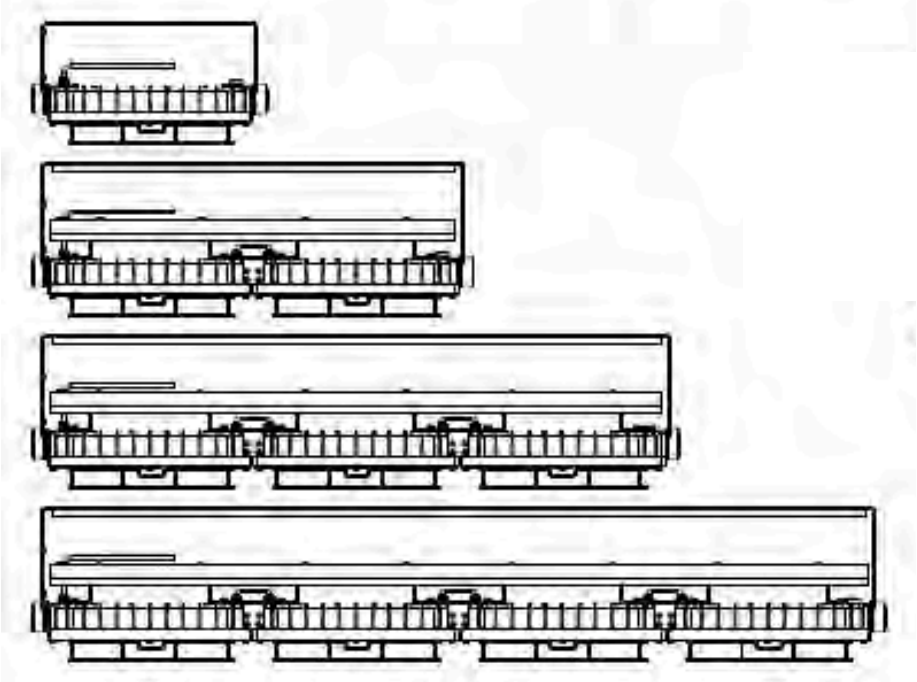

35W / 20W / 10W

70W / 40W / 20W

105W / 60W / 30W

140W / 80W / 40W

Technical Info

DIMENSION

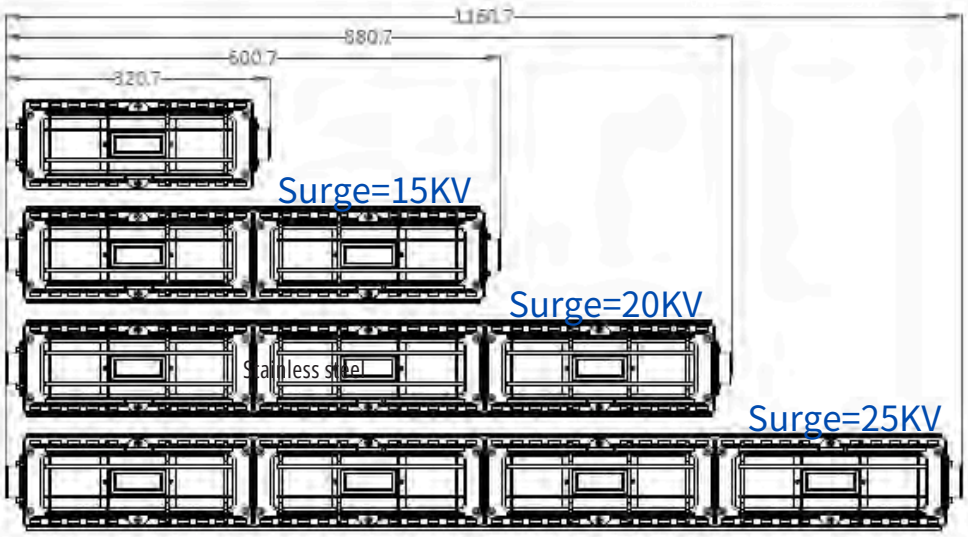

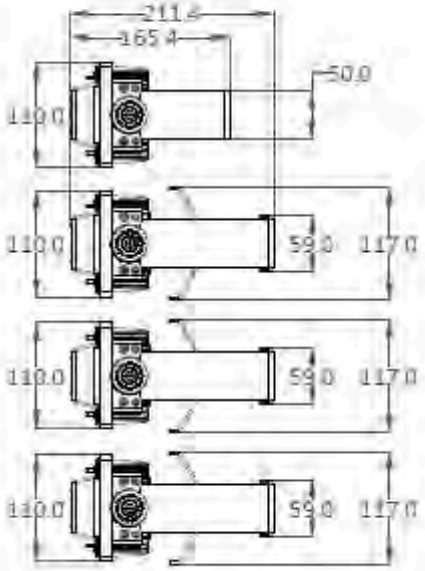

IP68

with wire guards, Unit: mm

CONFIGURATION

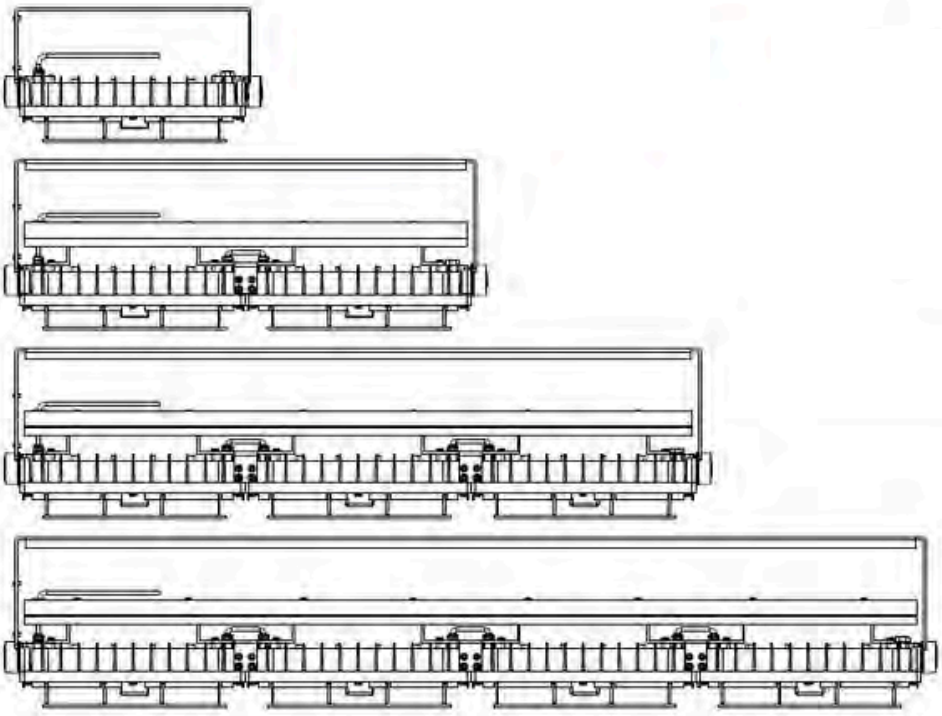

35W / 20W / 10W

70W / 40W / 20W

105W / 60W / 30W

140W / 80W / 40W

ParagonLED®

Paragon Semiconductor lighting Technolgoy Inc.

CEO : Chia Tin Chung, Ph.D
ct_chung@mac.com

Paul Hong
paul.hong@paragonled.com

Contact

HeadQuarters (Taiwan)
ADD: 3F., No. 369,Sec. 2, Wenhua 2nd Rd., Linkou Dist. NewTaipei City 244016, Taiwan (R.O.C.)
TEL: +886-2-2602-1066
FAX: +886-2-2601-0508

USA Office : 3333 S. Brea Canyon Road, #206 Diamond Bar, CA 91765 US
TEL:+1-909-896-8000
Email:sales@paragonled.com
https://thermal-tech-lighting.com

