TTL-XT 45W
Extreme Temperatures Lighting

ParagonLED®

70° Beam Angle High Temperature Lighting

"A real innovation in extreme environment LED lighting. "

- Engineered and tested for reliable operation you can count on in temperatures ranging from -80°C(-112°F) to 115°C (239°F)
- PVDF corrosion resistant coating over a die-cast aluminum housing + stainless steel hardware for incredible durability. 1,000 hour salt-fog test yielded no corrosion. [ASTM B117-19/ASTM D610-08(2019)]
- Instantaneous activation of lighting function, without the need for standby time.
- Game changing LED module design (see details below). Replaceable to reduce the cost of long term ownership.
- Chemical repellent housing to stand up in areas where industrial chemicals are used or produced.
- Provide better eye protection and workplace safety.

We use Nord-Lock washers for optimized safety performance.
NORD-LOCK

Nord-Lock wedge-locking washers consistently outperform alternative locking methods when it comes to securing bolted joints. This is proven by the results of thousands of Junker tests carried out for customers all over the world by Nord- Lock engineers. When exposed to transverse vibrations underneath the bolt head, alternative locking methods such as plain washers, helical spring washers, check lock nuts, nylon inserted nuts and double nuts all show a loss of clamp load – loosening the bolt and exposing the joint to failure unless frequently retightened. So, Nord-Lock engineers would usually recommend wedge-locking washers to achieve the most secure bolted joint.



The heart of the TTL series is its revolutionary DRIVER-ON-BOARD LED MODULE.

MIL-STD-810G (–80 °C) + MIL-STD-810H (+115 °C)

A marvel of engineering and innovative manufacturing processes, this proprietary module gives the TTL series outstanding light performance even in extreme hot and cold temperatures and requires no separate driver.

Over-Engineered
We use 12 IC current control chips when 4 would be enough for extra durability. Tested to 200° C without failure.

No Load Shedding
As modules approach their max. rated temperature, lumen output will not decrease. Reducing output at high temp. is a common occurrence with other high temp. lights.

1.2 mil Gold Wire
TTL series LEDs are connected with gold wire for enhanced durability under heavy thermal cycle stress.

No Harmonic Distortion
Quality components and advanced circuit design results in longer fixture life and no line noise generated by the TTL series.

No Inrush Current
Inrush current has been engineered out of the module preventing large line voltage drops at start-up protecting the fixture and other equipment.

Waterproof/Thermal Coating
Special silicone based coating creates a waterproof seal around the module and dissipates heat for increased durability.

ParagonLED®

IP66

SPECIFICATIONS

Voltage 120VAC / 277VAC / 347VAC / 480VAC/ 600VAC / 250VDC
Wattage 45W
Color Temp 4000K /5000 K
Housing C5M(standard)
Color Black(standard)
Lens Flat tempered glass lens
Efficacy 125 lm/W
CRI >70
Beam Angle 70°
Cable Gland Stainless steel
Power Cord 600V / 200°C rated
Surge Protection > 15KV
Ambient Temp. -80°C (-112°F) to 115°C (239°F)
MIL-STD-810G (–80 °C) + MIL-STD-810H (+115 °C)

LUMENS

70°
5,625 lm

(5000K)

WARRANTY

Ambient Temperature	Warranty Length
65°C (149°F) Max Ambient Temp.	7 Year Limited Warranty
85°C (185°F) Max Ambient Temp.	5 Year Limited Warranty
105°C (221°F) Max Ambient Temp.	3 Year Limited Warranty

Ordering Information

TTL	4 5 W	40 4000K 50 5000K	120V 277V 347V 480V 600V 250V	1 70°	1 C5M	1 black

Example:TTL-45-50-120V-111

Dimensions

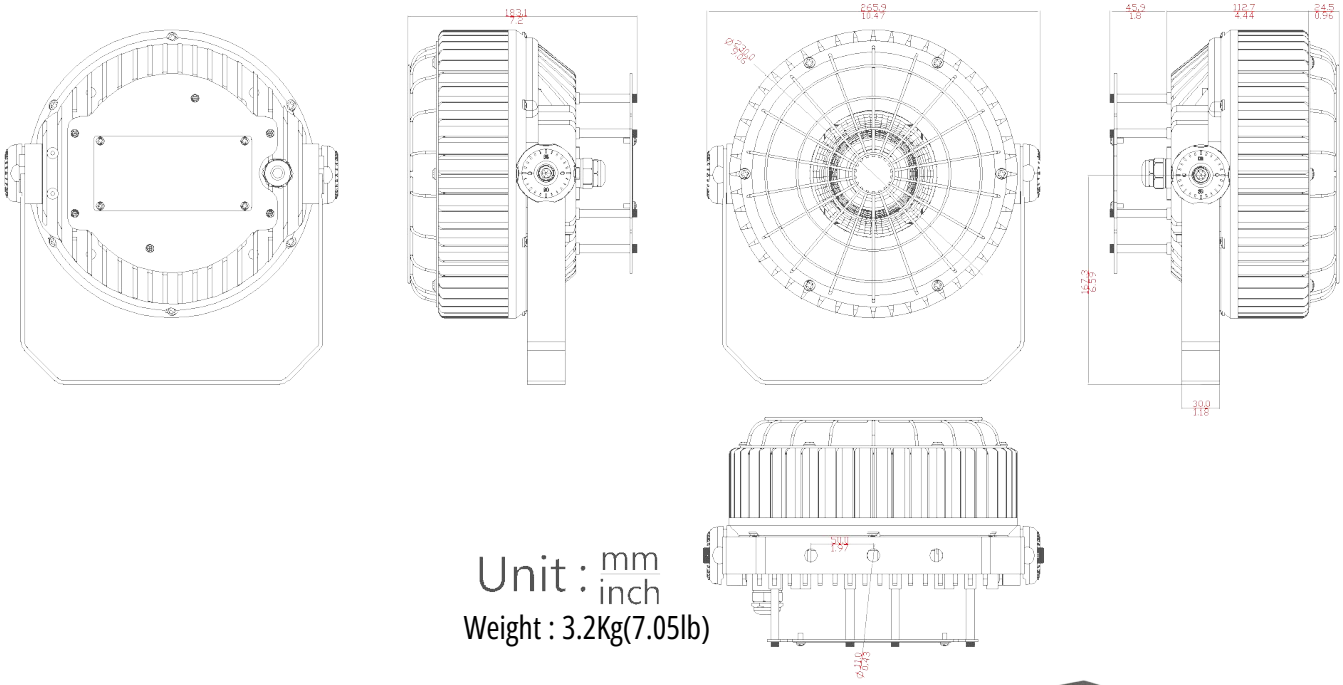

Unit : mm / inch

Weight : 3.2Kg(7.05lb)







Specifications and data are subject to change without notice.